ARISTON

SPARE PARTS EXPLODED VIEW
GAS-WALL BOILER ATM. BURNER

Model

CLAS X

R8203475-05 - 24/09/2018

Col	Reference	Model type	Begin	End
1	3300866	CLAS X 24 CF NG	09-2016	-
2	3300864	CLAS X 24 FF NG	09-2016	-
2	3301335	CLAS X 24 FF NG	02-2018	-
3	3300865	CLAS X 28 FF NG	09-2016	-
3	3301336	CLAS X 28 FF NG	02-2018	-
4	3301320	CLAS X 35 FF NG	02-2018	-
5	3300867	CLAS X SYSTEM 24 CF NG	12-2016	-
6	3300868	CLAS X SYSTEM 28 CF NG	12-2016	-
7	3300869	CLAS X SYSTEM 24 FF NG	12-2016	-
8	3300870	CLAS X SYSTEM 28 FF NG	12-2016	-
9	3300871	CLAS X SYSTEM 32 FF NG	12-2016	-

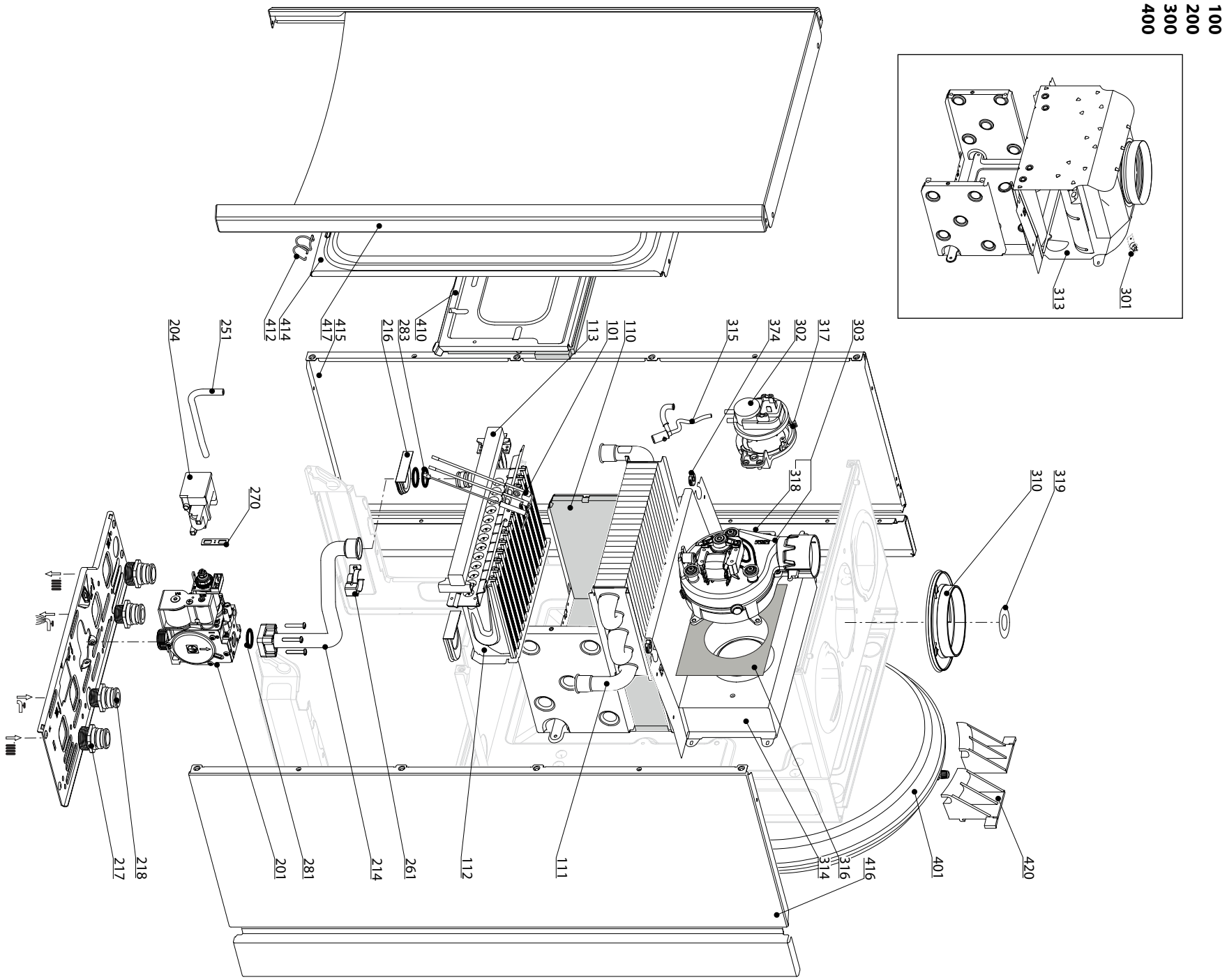
100
200
300
400
301
313
319
310
420
401
416
316
314
111
112
261
214
281
201
218
217
303
317
302
374
318
315
110
101
113
410
283
216
415
417
414
412
251
204
270

	Description	Manf. Pt. N	Type	1 CLAS X 24 CF	2 CLAS X 24 FF	3 CLAS X 28 FF	4 CLAS X 35 FF	5 CLAS X SYSTEM 24 CF	6 CLAS X SYSTEM 28 CF	7 CLAS X SYSTEM 24 FF	8 CLAS X SYSTEM 28 FF	9 CLAS X SYSTEM 32 FF	10	11	12	13	14	15	16	17	18	From	to
0100	BURNER ASSEMBLY																						
0101	ELECTRODE (IGNITION/IONIZATION)	65115802		●	●	●	●	●	●	●	●	●											
0110	PANELS (KIT)	65104695		●		●		●			●												
	PANELS (KIT)	65105029					●		●			●											
	PANELS (KIT)	65106298			●					●													
0111	HEAT EXCHANGER	65104247		●				●															
	HEAT EXCHANGER	65105041					●					●											
	HEAT EXCHANGER	65111931							●														
	HEAT EXCHANGER	65115065			●					●													
	HEAT EXCHANGER	65115801				●					●												
0112	BURNER 11NP	65106294			●					●													
	BURNER 13NP	60001582		●				●															
	BURNER 13NP	65104220				●					●												
	BURNER 15NP	65105027							●														
	BURNER 16NP	60001596					●					●											
0113	GAS MANIFOLD 11 INJ. D:1.32	65106302	G20		●					●													
	GAS MANIFOLD 13 INJ. D:1.25	65104302	G20	●				●															
	GAS MANIFOLD 13 INJ. D:1.32	65104226	G20			●					●												
	GAS MANIFOLD 15 INJ. D:1.25	65105026	G20						●														
	GAS MANIFOLD 16 INJ. D:1.32	65105997	G20				●					●											
0200	GAS SECTION																						
0201	GAS VALVE	65115771		●	●	●	●	●	●	●	●	●											
0204	SPARK GENERATOR	65115791		●	●	●	●	●	●	●	●	●											
0214	PIPE (GAS VALVE/BURNER)	65115772		●	●	●	●	●	●	●	●	●											
0216	GROMMET	60000624		●	●	●	●	●	●	●	●	●											
0217	UNION (3/4»)	65114929		●	●	●	●	●	●	●	●	●											
0218	UNION (1/2»)	65114930		●	●	●	●	●	●	●	●	●											
0251	EPDM PIPE	65115773		●	●	●	●	●	●	●	●	●											
0261	CLIP	60001861		●	●	●	●	●	●	●	●	●											
0270	GASKET (SPARK GENERATOR)	574279		●	●	●	●	●	●	●	●	●											
0281	O-RING 22.22X2.62	65104304		●	●	●	●	●	●	●	●	●											
0283	O-RING 17.17X1.78	65104303		●	●	●	●	●	●	●	●	●											
0300	FAN ASSEMBLY																						
0301	THERMOSTAT 75-65°C	999539		●	●	●	●	●	●	●	●	●											
0302	AIR PRESSURE SWITCH 50 Pa	65104671-01			●					●													
	AIR PRESSURE SWITCH 74 Pa	65104672-01				●	●				●	●											
0303	FAN 24 KW	65115813			●					●													
	FAN 28-32 KW	65115814				●					●	●											
	FAN 32-35 KW	65115815					●																
0310	AIR CONNECTION	65115914			●	●	●			●	●	●											
0313	COMBUSTION CHAMBER 24 CF	65104218		●				●															
	COMBUSTION CHAMBER 28 CF	65105028							●														
0314	COMBUSTION CHAMBER 24 FF	65115800			●					●													
	COMBUSTION CHAMBER 28 FF	65115799				●					●												
	COMBUSTION CHAMBER 32/35 FF	65115798					●					●											
0315	CONDENSATE TRAP	65105349			●	●	●			●	●	●											
0316	PANEL (INSULATION - FAN)	65104305			●	●	●			●	●	●											
0317	SUPPORT (AIR PRESSURE SWITCH)	65115812			●	●	●			●	●	●											
0318	VENTURI 15/24FF	65106516			●					●													
	VENTURI 28/32FF	65118171				●					●	●											
	VENTURI 32/35FF	65118172					●																
0319	RESTRICTOR KIT	60001598		●	●	●	●	●	●	●	●	●											
0374	CABLE INLET RUBBER WASHER	60000716		●	●	●	●	●	●	●	●	●											
0400	SEALED CASE																						
0401	EXPANSION VESSEL 8L	65104261		●	●	●	●	●	●	●	●	●											
0410	PANEL (COMBUSTION CHAMBER)	65104240		●		●		●			●												
	PANEL (COMBUSTION CHAMBER)	65105033					●		●			●											
	PANEL (COMBUSTION CHAMBER)	65106296			●					●													
0414	PANEL (FRONT - SEALED CHAMBER)	65105678-02			●	●				●	●												
	PANEL (FRONT - SEALED CHAMBER)	65105679-02					●					●											
0416	SIDE PANELS LEFT + RIGHT - WHITE	65115804		●	●	●	●	●	●	●	●	●											
0417	CASE PANEL (FRONT)	65115807					●		●			●											
	CASE PANEL (FRONT)	65115808-01		●	●	●		●		●	●												
0420	EXPANSION VESSEL SUPPORT	65104696		●	●	●	●	●	●	●	●	●											

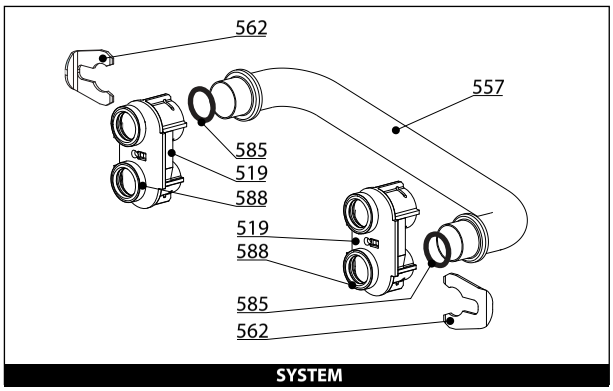

SYSTEM

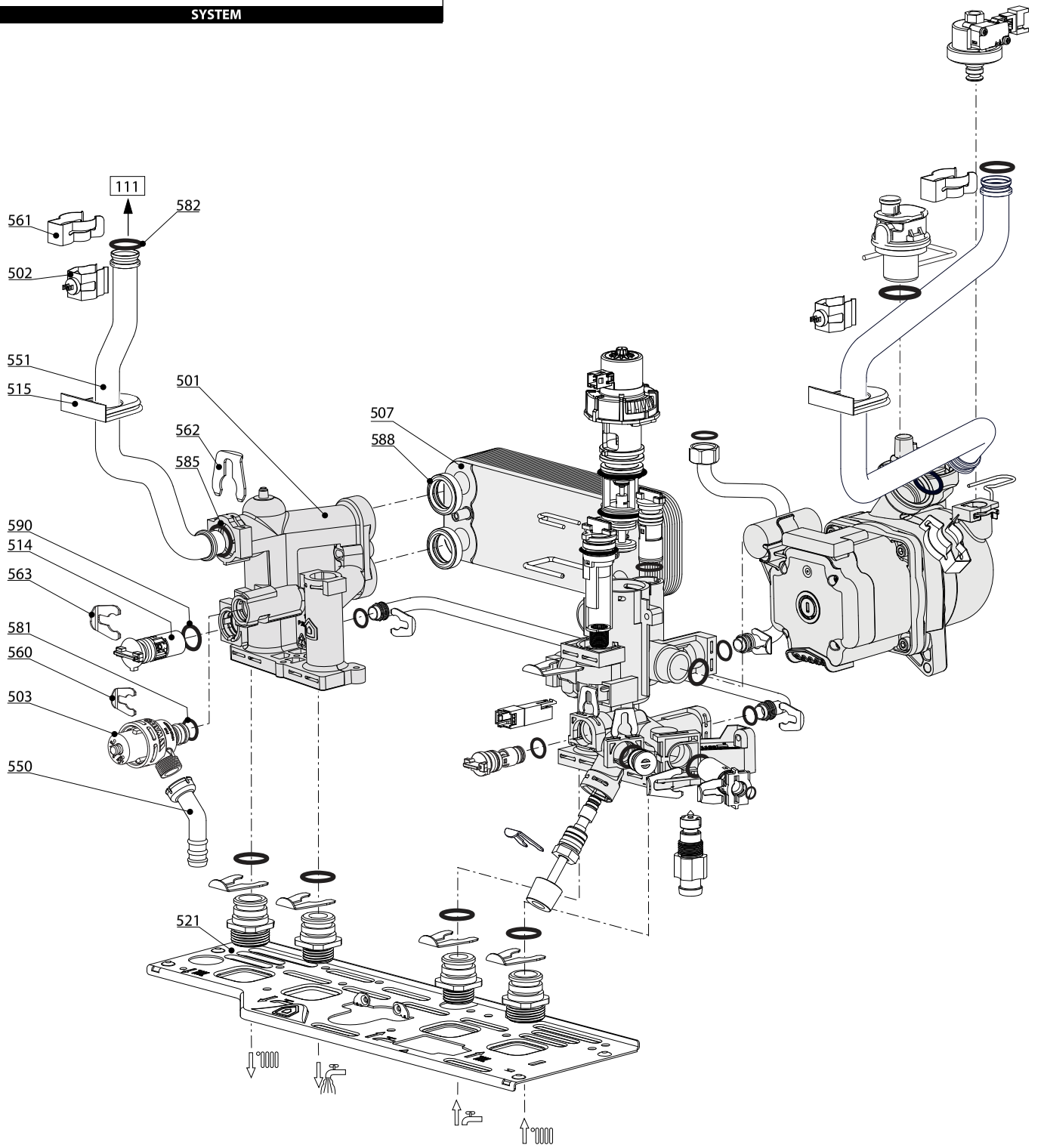

R8209245

	Description	Manf. Pt. N	Type	CLAS X 24 CF (1)	CLAS X 24 FF (2)	CLAS X 28 FF (3)	CLAS X 35 FF (4)	CLAS X SYSTEM 24 CF (5)	CLAS X SYSTEM 28 CF (6)	CLAS X SYSTEM 24 FF (7)	CLAS X SYSTEM 28 FF (8)	CLAS X SYSTEM 32 FF (9)	10	11	12	13	14	15	16	17	18	From	to
0500	FLOW GROUP																						
0501	FLOW GROUP	65115933						●	●	●	●	●											
	FLOW GROUP	65115933		●	●	●	●															08/16	05/18
	FLOW GROUP	65117952		●	●	●	●															06/18	
	REPLACEMENT HYDRAULIC KIT	65116615		●	●	●																	07/16
0502	TEMPERATURE PROBE + CLIP	990686-01		●	●	●	●	●	●	●	●	●											
0503	PRESSURE RELIEF VALVE (3 BAR)	61312668		●	●	●	●	●	●	●	●	●											
0507	SANITARY HEAT EXCHANGER (16 P.)	65104333		●	●	●	●																
0514	BY-PASS	65114917		●	●	●	●	●	●	●	●	●											
0515	GROMMET	60000808		●	●	●	●	●	●	●	●	●											
0519	INTERFACE ‘System +’ Open	60001365						●	●	●	●	●											
0521	HYDRAULIC GROUP SUPPORT	65115797		●	●	●	●	●	●	●	●	●											
0550	PIPE (SAFETY VALVE OUTLET)	60001955		●	●	●	●	●	●	●	●	●											
0551	PIPE (C.H. FLOW)	65115067			●					●													
	PIPE (C.H. FLOW)	65115763		●				●															
	PIPE (C.H. FLOW)	65115764					●		●			●											
	PIPE (C.H. FLOW)	65115765				●					●												
0557	PIPE	65115935						●	●	●	●	●											
0560	CLIP	65114933		●	●	●	●	●	●	●	●	●											
0561	CLIP	61307589		●	●	●	●	●	●	●	●	●											
0562	CLIP D18	65104259		●	●	●	●	●	●	●	●	●											
0563	CLIP	65114932		●	●	●	●	●	●	●	●	●											
0581	O-RING 17.96X2.62	65104337		●	●	●	●	●	●	●	●	●											
0582	O-RING 17.86X2.62	61308091		●	●	●	●	●	●	●	●	●											
0585	O-RING 17.04X3.53	65104262		●	●	●	●	●	●	●	●	●											
0588	EXCHANGER GASKET	65114928		●	●	●	●	●	●	●	●	●											
0590	O-RING 11.91X2.62	65114940		●	●	●	●	●	●	●	●	●											

600

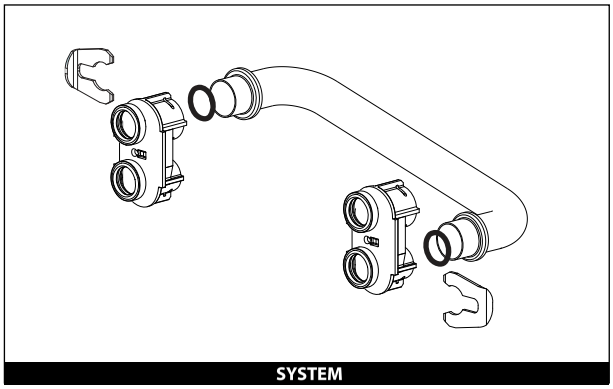

SYSTEM

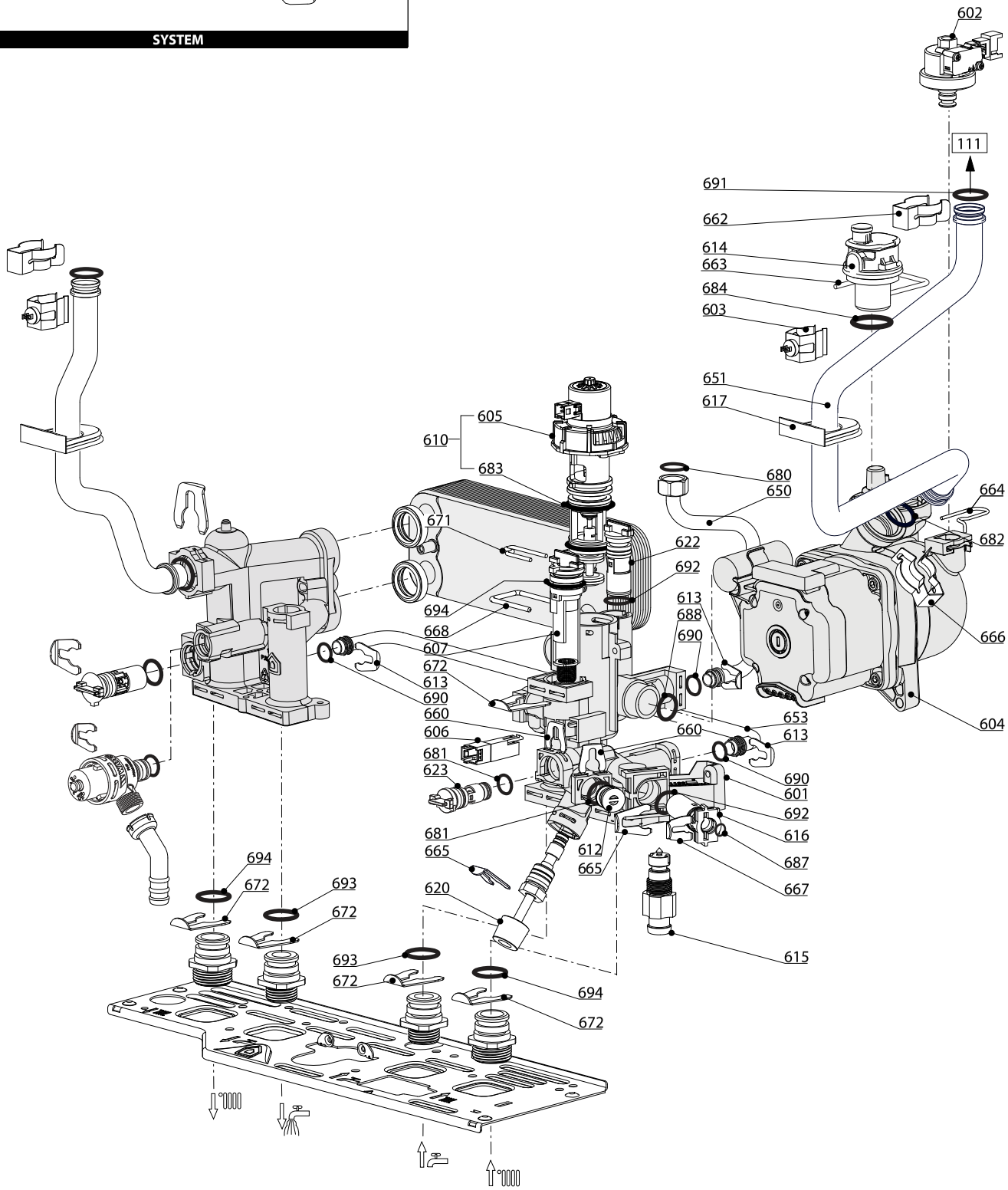

R8209247

	Description	Manf. Pt. N	Type	CLAS X 24 CF	CLAS X 24 FF	CLAS X 28 FF	CLAS X 35 FF	CLAS X SYSTEM 24 CF	CLAS X SYSTEM 28 CF	CLAS X SYSTEM 24 FF	CLAS X SYSTEM 28 FF	CLAS X SYSTEM 32 FF											From	to
				1	2	3	4	5	6	7	8	9	10	11	12	13	14	15	16	17	18			
0600	RETURN GROUP																							
0601	REPLACEMENT HYDRAULIC KIT	65116615		●	●	●																		07/16
	RETURN GROUP	65116540		●	●	●	●																08/16	05/18
	RETURN GROUP	65116613						●	●	●	●	●												
	RETURN GROUP	65117953		●	●	●	●																06/18	
0602	LOW PRESSURE SWITCH	65115792		●	●	●	●	●	●	●	●	●												
0603	TEMPERATURE PROBE + CLIP	990686-01		●	●	●	●	●	●	●	●	●												
0604	PUMP 5M 2V WILO	65104319	WILO	●	●	●	●	●	●	●	●	●												
0605	MOTOR (3-WAY VALVE)	65114936		●	●	●	●	●	●	●	●	●												
0606	SENSOR (REED)	65114921-01		●	●	●	●																	
0607	FLOW METER	65114919		●	●	●	●	●	●	●	●	●												
0610	MOTOR + SPRING 3 WAY VALVE KIT	65114924		●	●	●	●	●	●	●	●	●												
0612	PLUG	65114920		●	●	●	●	●	●	●	●	●												
0613	CLIP D10	65104260		●	●	●	●	●	●	●	●	●												
0614	AUTO AIR VENT - WILO	65104703	WILO	●	●	●	●	●	●	●	●	●												
0615	DRAIN COCK	65114922		●	●	●	●	●	●	●	●	●												
0616	WATER FILTER	65114923		●	●	●	●	●	●	●	●	●												
0617	GROMMET	60000807		●	●	●	●	●	●	●	●	●												
0620	FILLING TAP KIT	65116541		●	●	●	●	●	●	●	●	●												
0622	BY-PASS	65114917		●	●	●	●																	
0623	NON-RETURN VALVE	65114918		●	●	●	●	●	●	●	●	●												
0650	PIPE (EXPANSION VESSEL)	65115068		●	●	●	●	●	●	●	●	●												
0651	PIPE (C.H. RETURN)	65115069			●					●														
	PIPE (C.H. RETURN)	65115767					●					●												
	PIPE (C.H. RETURN)	65115768				●					●													
	PIPE (C.H. RETURN)	65115769							●															
	PIPE (C.H. RETURN)	65115770		●				●																
0653	BY-PASS PIPE	65116210		●	●	●	●																	05/18
	BY-PASS PIPE	65116210						●	●	●	●	●												
0660	CLIP	65114933		●	●	●	●	●	●	●	●	●												
0662	CLIP	61307589		●	●	●	●	●	●	●	●	●												
0663	U-CLIP	65104704		●	●	●	●	●	●	●	●	●												
0664	CLIP	65104322		●	●	●	●	●	●	●	●	●												
0665	CLIP	65114932		●	●	●	●	●	●	●	●	●												
0666	CLIP	60000309		●	●	●	●	●	●	●	●	●												
0667	CLIP	65100680		●	●	●	●	●	●	●	●	●												
0668	CLIP	65114927		●	●	●	●	●	●	●	●	●												
0671	CLIP	65114926		●	●	●	●	●	●	●	●	●												
0672	CLIP	65114931		●	●	●	●	●	●	●	●	●												
0680	GASKET 3/8»	573521		●	●	●	●	●	●	●	●	●												
0681	O-RING 9.9X2.62	65114937		●	●	●	●	●	●	●	●	●												
0682	O-RING 17.04X3.53	65104262		●	●	●	●	●	●	●	●	●												
0683	O-RING 23.47X2.62	65114939		●	●	●	●	●	●	●	●	●												
0684	O-RING 3X35 EPDM 75 SH	65104705		●	●	●	●	●	●	●	●	●												
0687	O-RING 5.7X1.9	61009834-10		●	●	●	●	●	●	●	●	●												
0688	O-RING 21.89X2.62	65104320		●	●	●	●	●	●	●	●	●												
0690	O-RING 8.9X2.7	61009834-14		●	●	●	●	●	●	●	●	●												
0691	O-RING 17.86X2.62	61308091		●	●	●	●	●	●	●	●	●												
0692	O-RING 11.91X2.62	65114940		●	●	●	●	●	●	●	●	●												
0693	O-RING 15,88X2,62	65114941		●	●	●	●	●	●	●	●	●												
0694	O-RING 17.13X2.62	65114938		●	●	●	●	●	●	●	●	●												

800

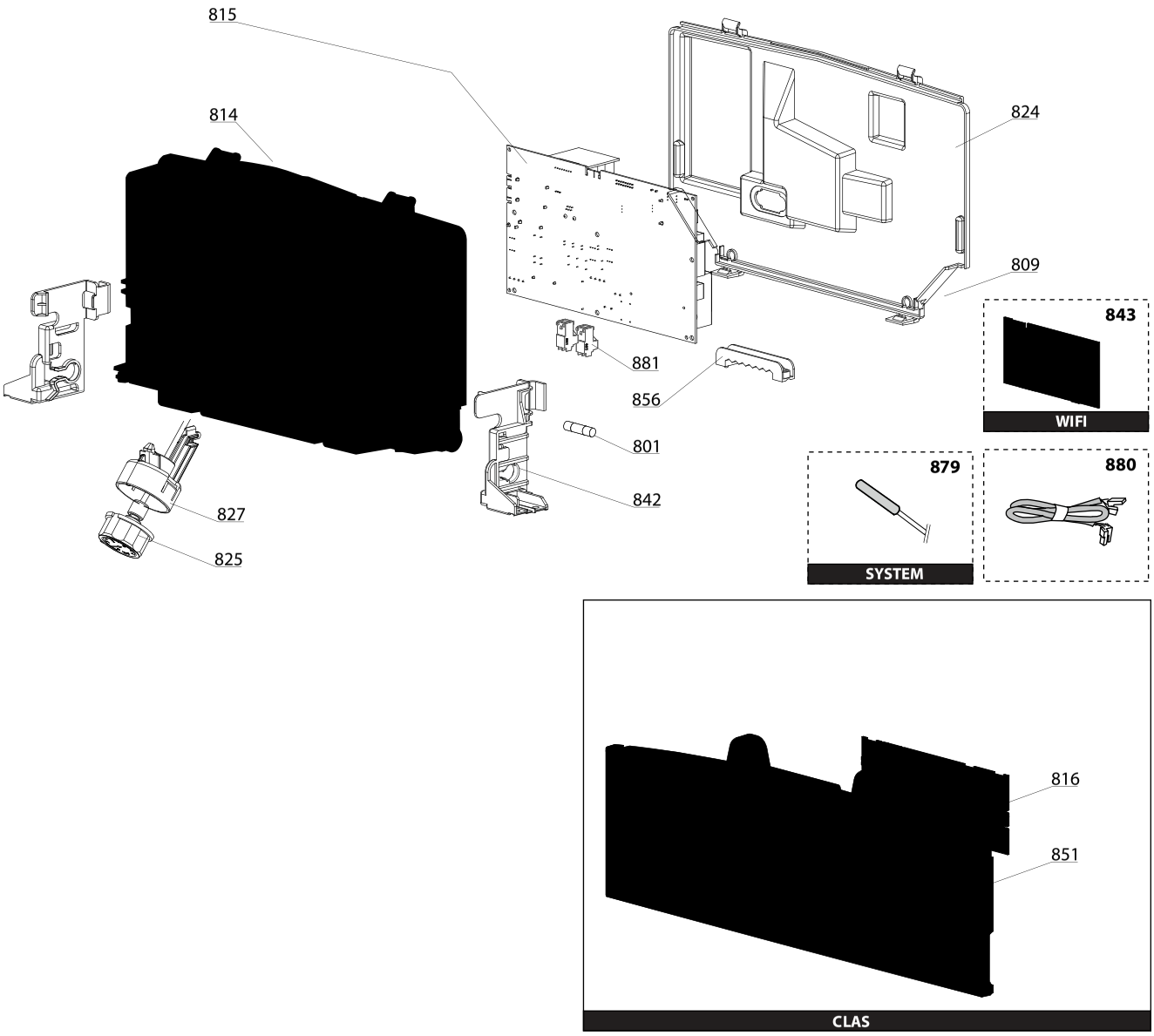

900

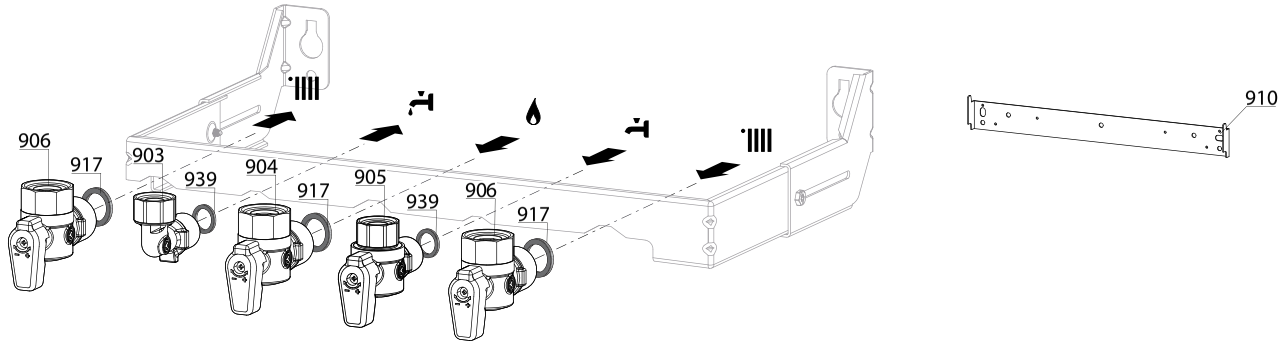

5000

5001	5002	5020
Transf. gaz Conv. gas Trasf. gas Transf. gas > **G31** (LPG - GPL)	Transf. gaz Conv. gas Trasf. gas Transf. gas > **G20** (NAT - MET)	Options Accessories Opzioni Accessorio

R8209246

	Description	Manf. Pt. N	Type	CLAS X 24 CF (1)	CLAS X 24 FF (2)	CLAS X 28 FF (3)	CLAS X 35 FF (4)	CLAS X SYSTEM 24 CF (5)	CLAS X SYSTEM 28 CF (6)	CLAS X SYSTEM 24 FF (7)	CLAS X SYSTEM 28 FF (8)	CLAS X SYSTEM 32 FF (9)	10	11	12	13	14	15	16	17	18	From	to
0800	ELECTRICAL BOX																						
0809	GROMMET (REGULATION ACCESS)	998382		●	●	●	●	●	●	●	●	●											
0814	CONTROL PANEL COVER (FRONT)	65115784		●	●	●	●	●	●	●	●	●											
0815	P.C.B. (MAIN)	65115783-01		●	●	●	●	●	●	●	●	●											
0816	P.C.B. (DISPLAY)	65115776		●	●	●	●	●	●	●	●	●											
0824	CONTROL PANEL COVER (REAR)	65115785		●	●	●	●	●	●	●	●	●											
0825	PRESSURE GAUGE 0-4 BAR D27MM KPL.	65114200		●	●	●	●	●	●	●	●	●											
0827	SUPPORT (PRESSURE GAUGE)	65115809		●	●	●	●	●	●	●	●	●											
0842	SIDE COVER SUPPORT	65115810					●		●			●											
	SIDE COVER SUPPORT	65115811		●	●	●		●		●	●												
0851	FRONT CONTROL PANEL COMPLETE	65115774					●		●			●											
	FRONT CONTROL PANEL COMPLETE	65115775		●	●	●		●		●	●												
0856	CABLE CLAMP	65103377		●	●	●	●	●	●	●	●	●											
0879	BOILER THERMISTOR TEMP. SENSOR	60000454						●	●	●	●	●											
0880	3-WAY VALVE CABLE	65115790		●	●	●	●																
	3-WAY VALVE CABLE	65115937						●	●	●	●	●											
	CABLE (IONIZATION ELECTRODE)	60001883		●	●	●	●	●	●	●	●	●											
	DISPLAY WIRING - 5 WIRES BLUES	60000746		●	●	●	●	●	●	●	●	●											
	EARTH WIRE	65104286		●	●	●	●	●	●	●	●	●											
	FAN CABLE	60001902			●	●	●			●	●	●											
	FEEDER 240V	60001619		●	●	●	●	●	●	●	●	●											
	NTC - PRES SWITCH CABLE	65115787			●	●	●			●	●	●											
	NTC - PRES SWITCH CABLE	65115789		●				●	●														
	PUMP 2V CABLE 5M WILO	65104520	WILO	●	●	●	●	●	●	●	●	●											
0881	CONNECTOR 2P	65111933		●	●	●	●	●	●	●	●	●											
	CONNECTOR 3P (x5)	65111934-01		●	●	●	●	●	●	●	●	●											
0900	JIG PLATE & PIPE FITTING																						
0903	HOT WATER CONNECTION	60000891		●	●	●	●	●	●	●	●	●											
0904	GAS SERVICE TAP	60000898		●	●	●	●	●	●	●	●	●											
0905	COLD WATER TAP	60000894		●	●	●	●	●	●	●	●	●											
0906	WATER FLOW & RETURN SERVI. TAP	60000885		●	●	●	●	●	●	●	●	●											
0910	WALL HOOK	60000625		●	●	●	●	●	●	●	●	●											
0917	SHEET GASKET D: 24-17-1.5	60061855-19		●	●	●	●	●	●	●	●	●											
0939	WASHER D: 18.4-12.2-1.5	60061855-14		●	●	●	●	●	●	●	●	●											

LIST OF THE ABBREVIATIONS

HW	:	Hot water.
CW	:	Cold water.
C	:	Ceramic resistance (normal heating).
Ca	:	Ceramic resistance (accelerated heating)
TP	:	Immersion heater.
1F	:	With fittings.
2F	:	Without fittings.
3F	:	With fittings and another outlet connection.
AMI	:	With mixing valve.
SMI	:	Without mixing valve.
PUISS	:	Power of th appliance.
PN	:	Appliance with normal pression.
LP	:	Appliance with low pression.
PV	:	Appliance with variable power.
PF	:	Appliance with fixed power.

IDENTIFICATION PLATE

SERIAL NUMBER

10 Characters : 04 05 125 011

- 011 → Sequencial number
- 125 → Manufacturing day
- 05 → Year of manufacture

11 Characters : 1 95 065004 - 31

- 1 → Month of manucfacture : from 1 to 9 → Jan. to Sep., O → Oct., N → Nov., D → Dec.
- 31 → Technical number of the appliance
- 065004 → Sequencial number
- 95 → Year of manufacture

19 Characters : 08 05 0013199 900640031

- 08 → Year of manufacture
- 05 → Month of manucfacture
- 900640031 → Product reference
- 0013199 → Sequencial number

20 Characters : 3675007 XX 2 07 070 00315

- 3675007 → Product reference
- 2 → Millenium of manufacture
- 00315 → Sequencial number
- 070 → Manufacturing day
- 07 → Year of manufacture

21 Characters : 3675007 XX 07 070 0000315

- 3675007 → Product reference
- 07 → Year of manufacture
- 0000315 → Sequencial number
- 070 → Manufacturing day

The indications mentionned on the prices, commercial or technical literature and the scheme are written for your guidance and are available at a given time. The CONSTRUCTOR retains the power to modify the presentation, the form, the size, the conception or the material of the products.